83 & 84

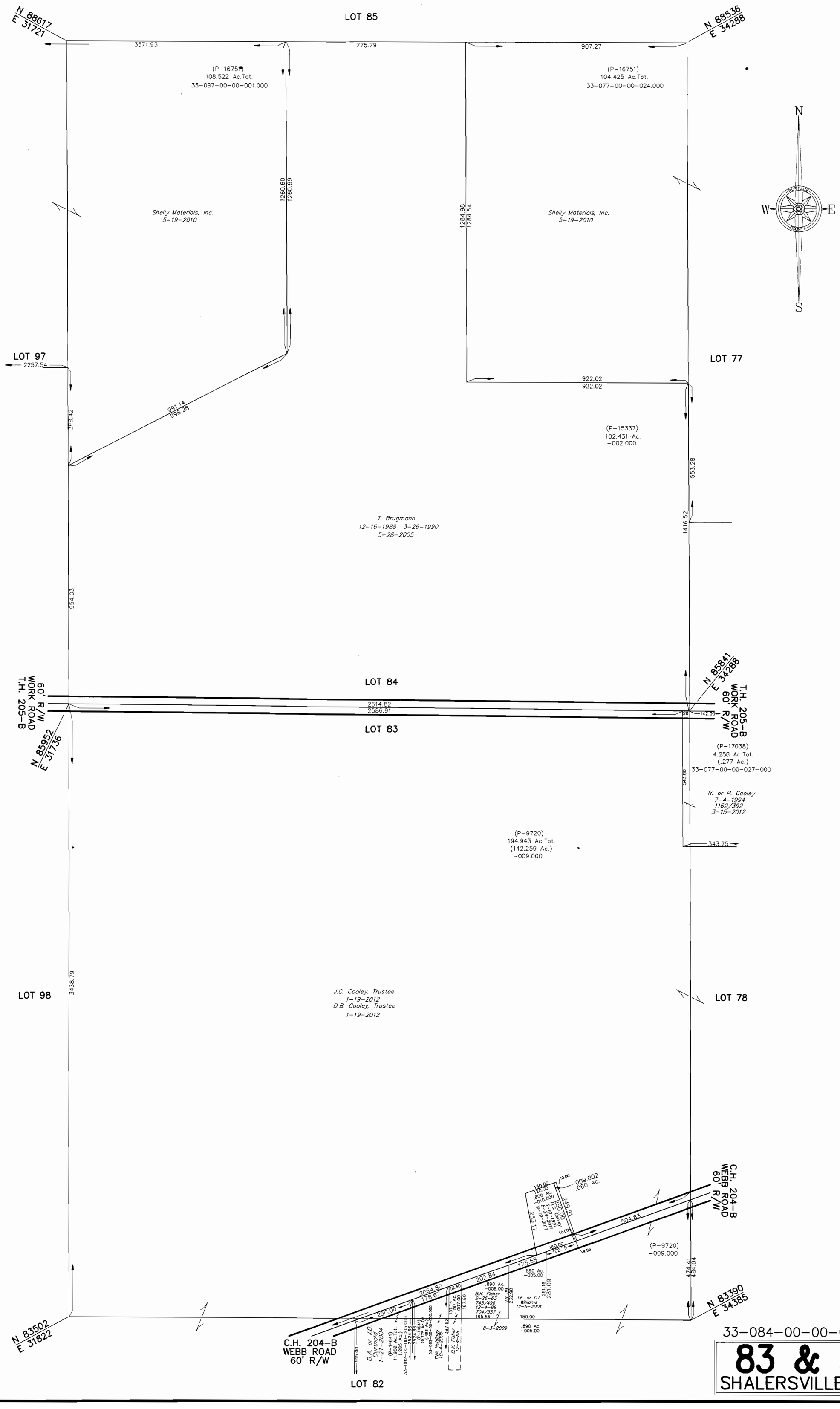

33-084-00-00-000.000

83 & 84

SHALERSVILLE TWP.